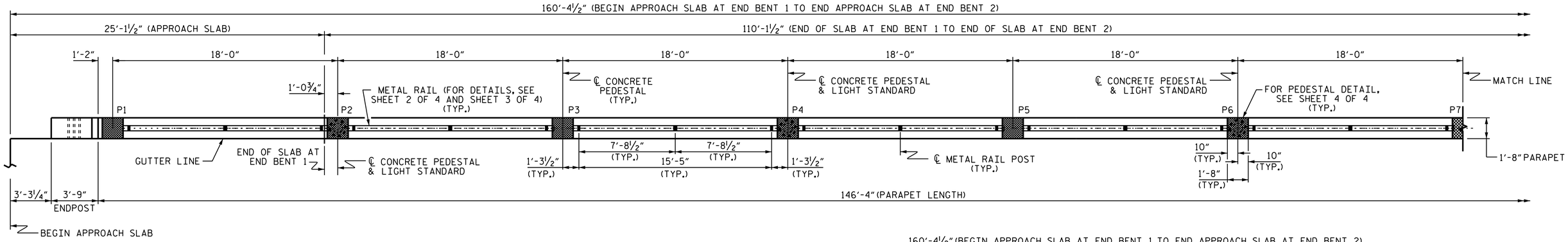

PLAN OF PARAPET, PEDESTAL, AND METAL RAIL

(LEFT SIDE SHOWN, RIGHT SIDE SIMILAR)
(PARAPET REINFORCEMENT NOT SHOWN FOR CLARITY)
(FOR PARAPET REINFORCEMENT, SEE BRIDGE APPROACH SLAB DETAILS, SHEET 3 OF 3)

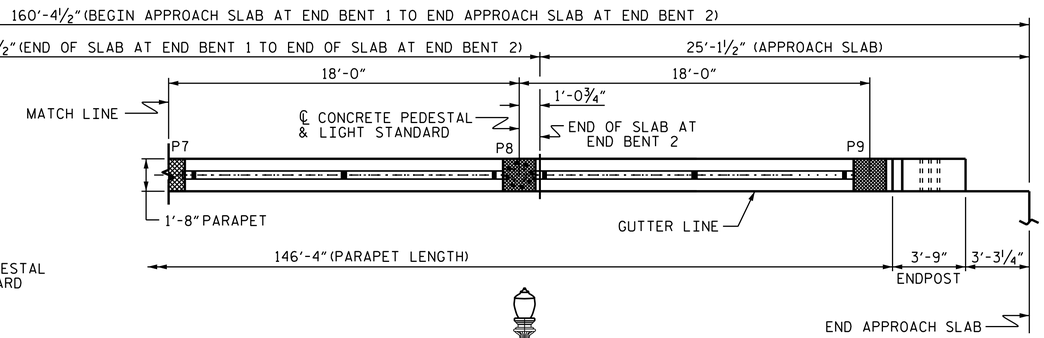

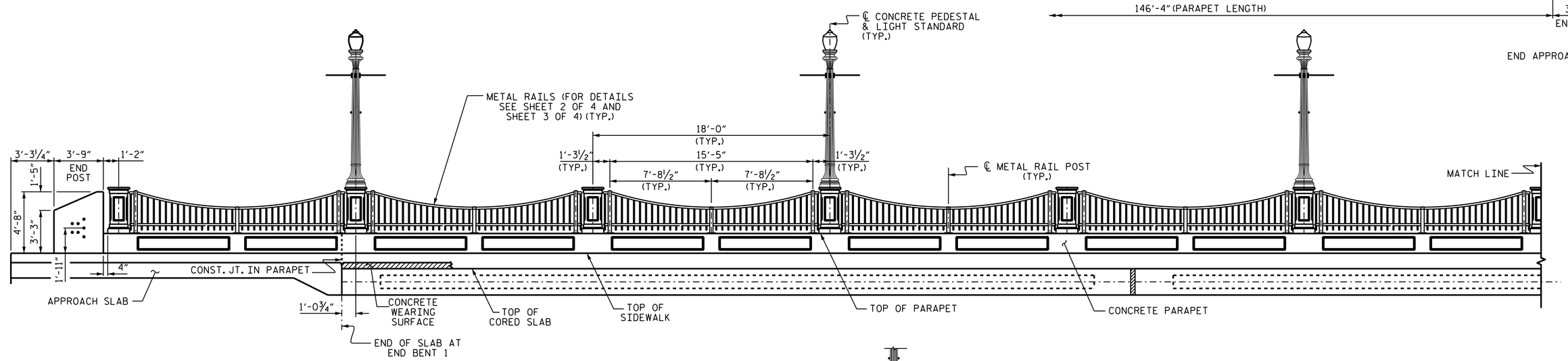

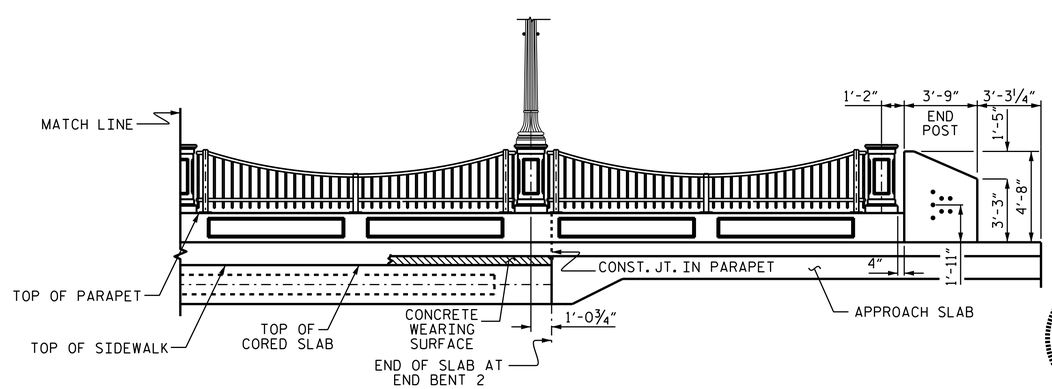

ELEVATION OF PARAPET, PEDESTAL, AND METAL RAIL

(LEFT SIDE ROADWAY FACE SHOWN, RIGHT SIDE ROADWAY FACE SIMILAR)

NORTH CAROLINA PROFESSIONAL SEAL 22005 ENGINEER A. KEITH PASCHAL

DocuSigned by: A. Keith Paschal F8B6AD6DB2FC48F...

12/5/2014

PROJECT NO. B-5129A
PAMLICO COUNTY
STATION: 13+68.50 -L-

SHEET 1 OF 4

STATE OF NORTH CAROLINA
DEPARTMENT OF TRANSPORTATION
RALEIGH
SUPERSTRUCTURE

CONCRETE PARAPET, PEDESTAL AND METAL RAIL DETAILS

REVISIONS						SHEET NO.
NO.	BY:	DATE:	NO.	BY:	DATE:	S-8
1			3			TOTAL SHEETS
2			4			25

DRAWN BY : B. N. BARODAWALA DATE : 3-17-14
CHECKED BY : D. G. ELY DATE : 3-24-14
DESIGN ENGINEER OF RECORD: A. K. PASCHAL DATE : 5-23-14

04-DEC-2014 15:08
R:\Structures\Final Plans\B-5129A_SD_CS.dgn
kpaschal