NOTES

STIRRUPS IN CAP MAY BE SHIFTED AS NECESSARY TO CLEAR DOWELS.

INSTALL THE 4"DIAMETER DRAIN PIPE THROUGH THE WING WALL AS REQUIRED FOR REINFORCED BRIDGE APPROACH FILLS. SEE THE ROADWAY PLANS. REINFORCING STEEL IN THE WING WALLS MAY BE SHIFTED AS NECESSARY TO CLEAR THE DRAIN PIPE.

FOR WING DETAILS, SEE SHEET 3 OF 4.

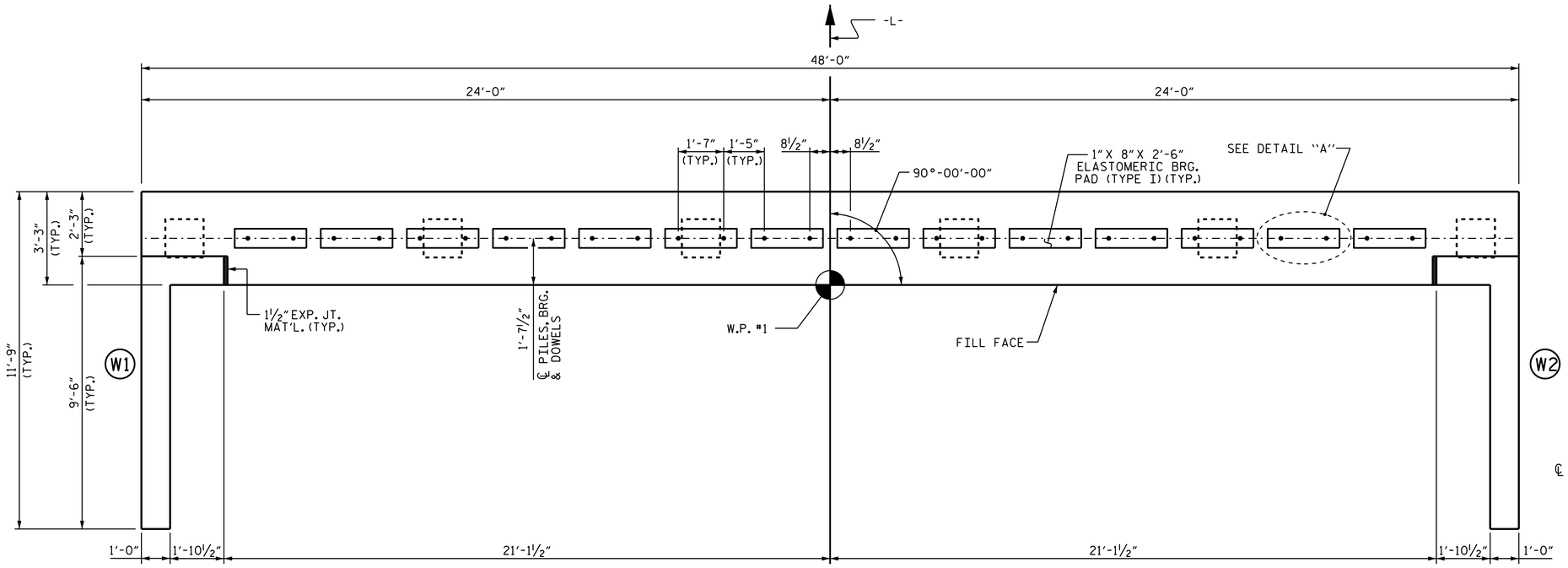

PLAN

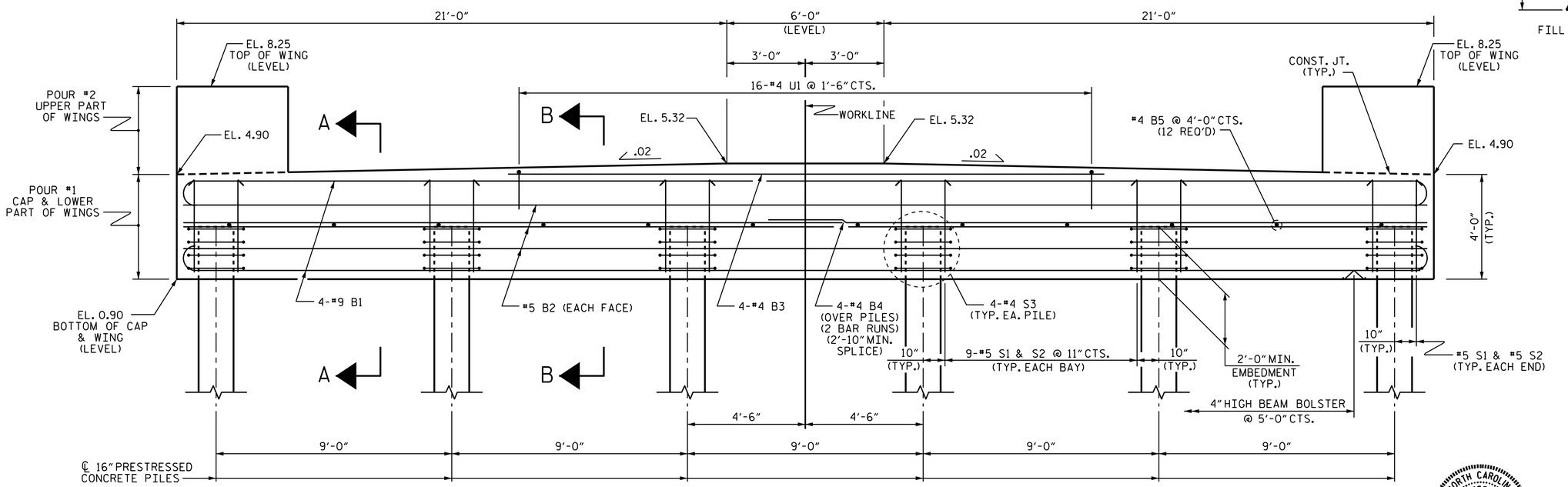

ELEVATION

WINGS NOT SHOWN FOR CLARITY.
FOR SECTION A-A & B-B, SEE SHEET 4 OF 4.

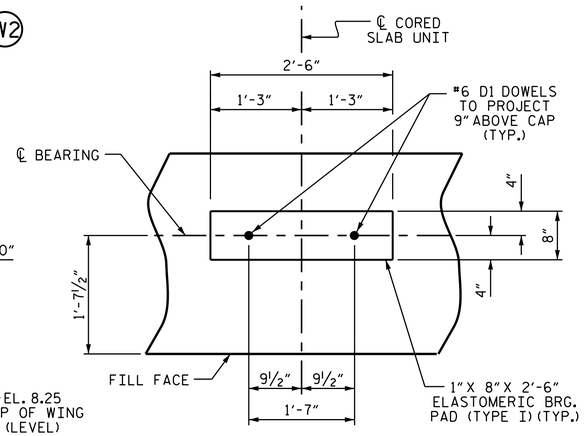

DETAIL "A"

PROJECT NO. B-5129A
PAMLICO COUNTY
STATION: 13+68.50 -L-

SHEET 1 OF 4

STATE OF NORTH CAROLINA
DEPARTMENT OF TRANSPORTATION
RALEIGH

SUBSTRUCTURE

END BENT 1

NORTH CAROLINA PROFESSIONAL SEAL 22005 ENGINEER A. KEITH PASCHAL

DocuSigned by: A. Keith Paschal
F8B6ADED82FC48F...
12/5/2014

REVISIONS						SHEET NO.
NO.	BY:	DATE:	NO.	BY:	DATE:	S-15
1			3			TOTAL SHEETS
2			4			25

DRAWN BY : B. N. BARODAWALA DATE : 11-25-13
CHECKED BY : D. G. ELY DATE : 1-7-14
DESIGN ENGINEER OF RECORD: M. L. RORIE DATE : 5-23-14

04-DEC-2014 15:09
R:\Structures\Final Plans\B-5129A_SD_EB.dgn
kpaschal