NOTES :

FOR BERM WIDTH DIMENSIONS, SEE GENERAL DRAWING.

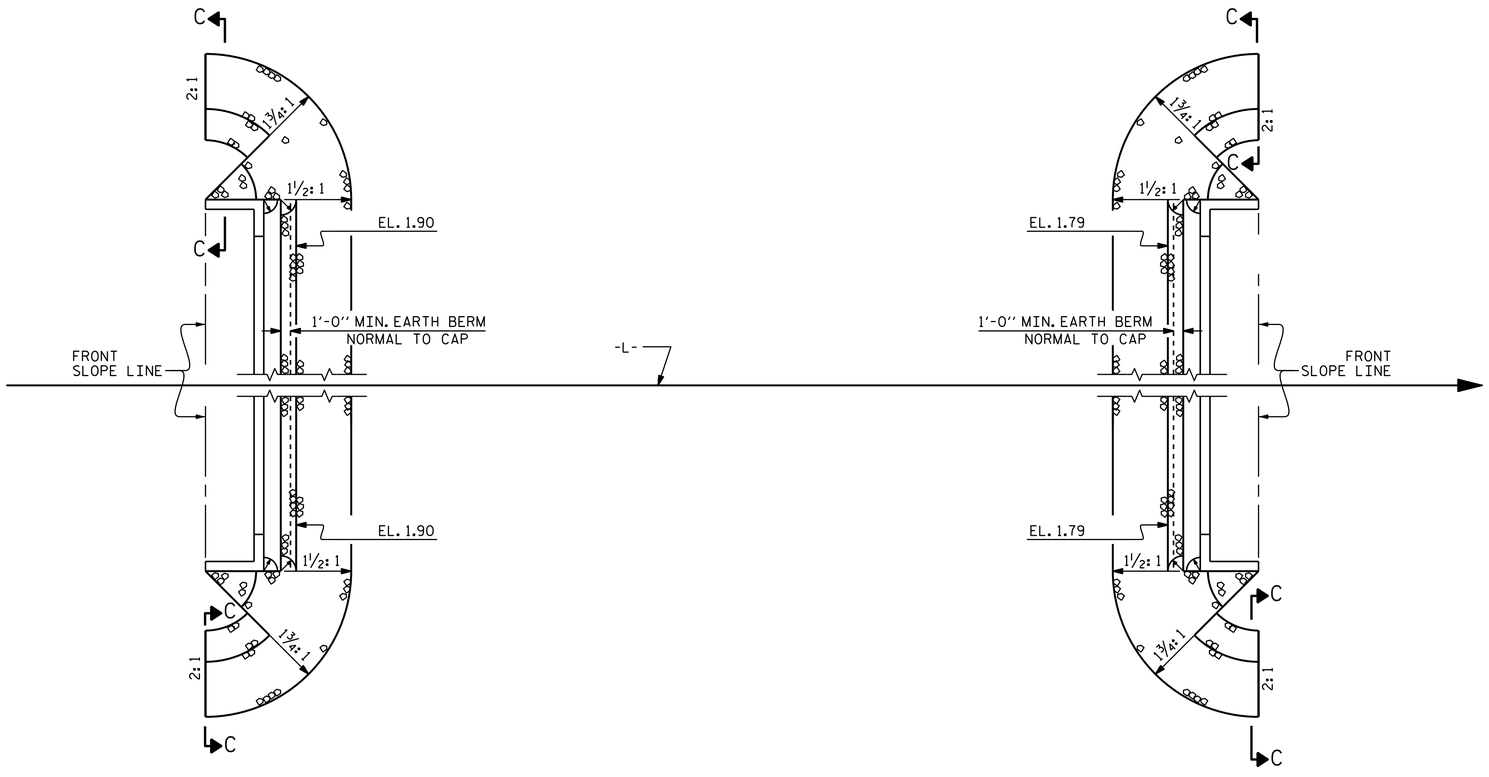

END BENT 1

END BENT 2

PLAN

ESTIMATED QUANTITIES		
BRIDGE @ STA. 13+68.50 -L-	RIP RAP CLASS II (2'-0" THICK)	GEOTEXTILE FOR DRAINAGE
	TONS	SQUARE YARDS
END BENT 1	62	69
END BENT 2	62	69

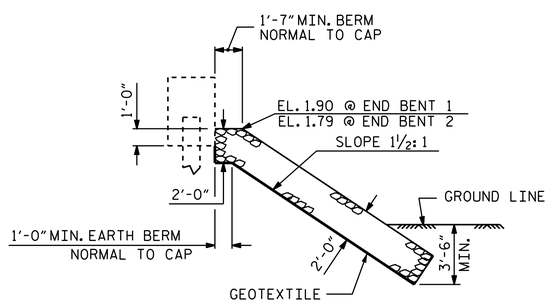

℄ SECTION

BERM RIP RAPPED

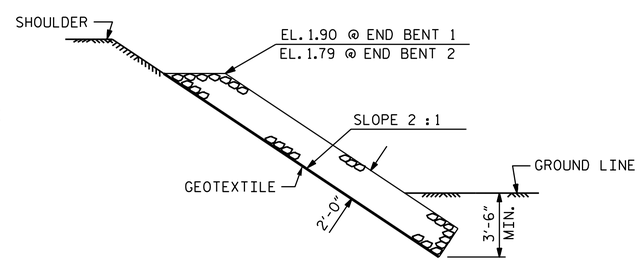

SECTION C-C

PROJECT NO. B-5129A

PAMLICO COUNTY

STATION: 13+68.50 -L-

STATE OF NORTH CAROLINA
DEPARTMENT OF TRANSPORTATION
RALEIGH

STANDARD

RIP RAP DETAILS

NORTH CAROLINA PROFESSIONAL SEAL 22005 ENGINEER A. KEITH PASCHAL

DocuSigned by: A. Keith Paschal F886AD6DB2FC48F...

12/5/2014

REVISIONS							
NO.	BY:	DATE:	NO.	BY:	DATE:		
1			3				
2			4				

SHEET NO. S-22

TOTAL SHEETS 25

ASSEMBLED BY : B.N.BARODAWALA DATE : 12-4-13
CHECKED BY : D. G. ELY DATE : 3-25-14

DRAWN BY : REK 1/84
CHECKED BY : RDU 1/84

REV. 5/1/06R TLA/GM
REV. 10/1/11 MAA/GM
REV. 12/21/11 MAA/GM

04-DEC-2014 15:09
R:\Structures\Final Plans\B-5129A_SD_RR.dgn
kpaschal

STD. NO. RR1 (Sht 2)