PROJ. REFERENCE NO.	SHEET NO.
B-5129A	TMP-2

GENERAL NOTES

IMPLEMENT TRAFFIC CONTROL IN ACCORDANCE WITH THE ROADWAY STANDARD DRAWINGS LISTED ON TMP-1.

CHANGES MAY BE REQUIRED WHEN PHYSICAL DIMENSIONS IN THE DETAIL DRAWINGS, STANDARD DETAILS AND ROADWAY DETAILS ARE NOT ATTAINABLE TO MEET FIELD CONDITIONS, OR RESULT IN DUPLICATE, OR UNDESIRED OVERLAPPING OF DEVICES. MODIFICATION MAY INCLUDE: MOVING, SUPPLEMENTING, COVERING OR REMOVAL OF DEVICES, AS DIRECTED BY THE ENGINEER.

STATE FORCES WILL INSTALL AND MAINTAIN THE PROJECT DETOUR AND THE TYPE III BARRICADES AT THE PROJECT LIMITS.

CALL JIM EVANS AT 252-830-3493 FOR COORDINATION.

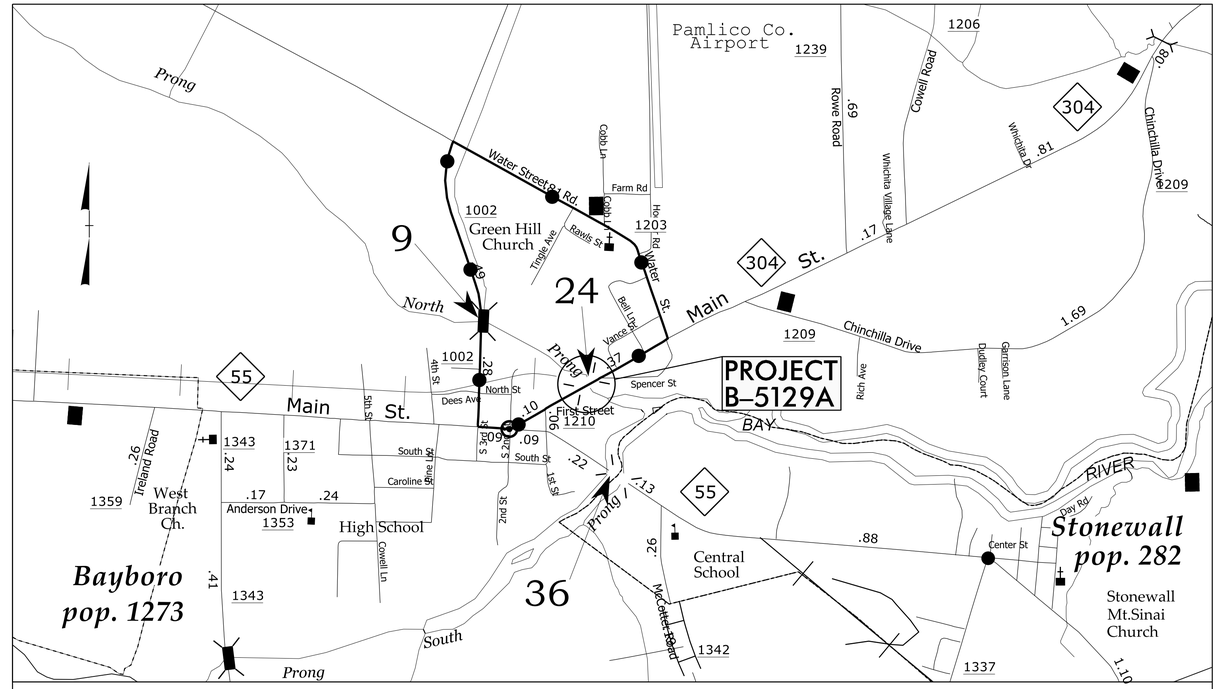

DETOUR MAP
(NOT TO SCALE)

LEGEND:

DETOUR ROUTE

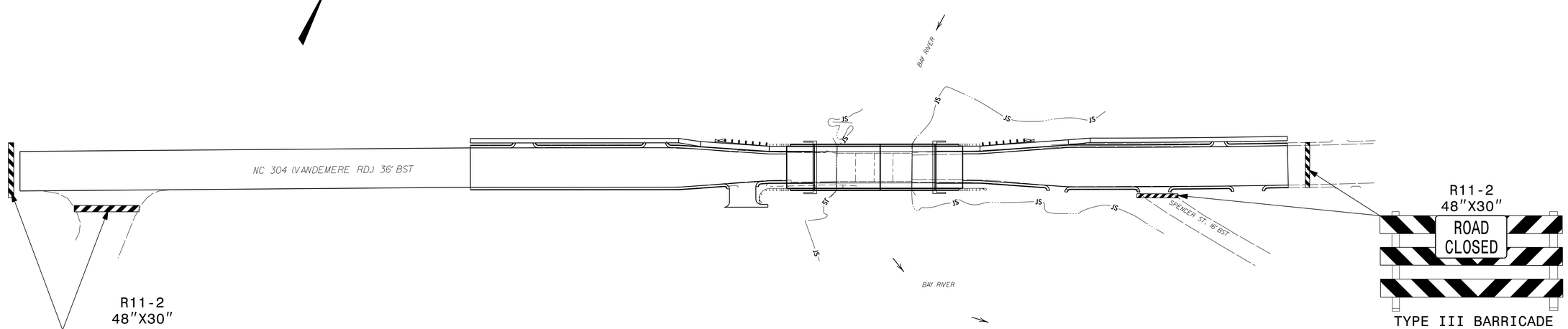

APPROVED: DocuSigned by: Dwayne Alligood

SEAL

NORTH CAROLINA PROFESSIONAL SEAL 16710 ENGINEER DWAYNE H. ALLIGOOD
12/8/2014

PROJECT NOTES, DETOUR AND PLANS

SCALE:	NONE
DATE:	5/9/14
DWG. BY:	TP
DESIGN BY:	VT
REVIEWED BY:	DA

REVISIONS

CADD FILE

08-DEC-2014 13:56
G:\PROJECTS\PAMLICO\pamlico#24 (B-5129A)\B-5129A_DDC2_PSH_TMP2.DGN
$$$$USERNAME$$$$