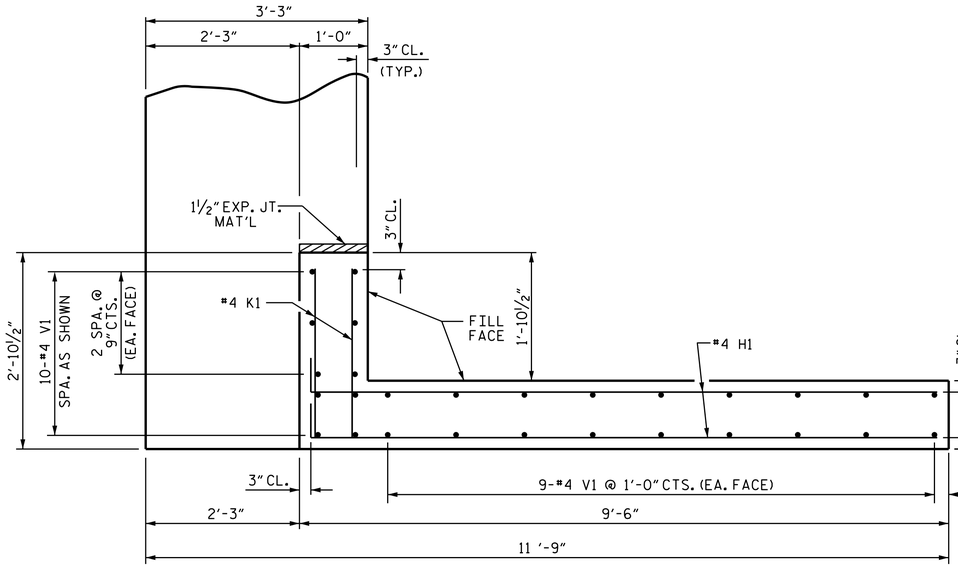

PLAN OF WING (W1)

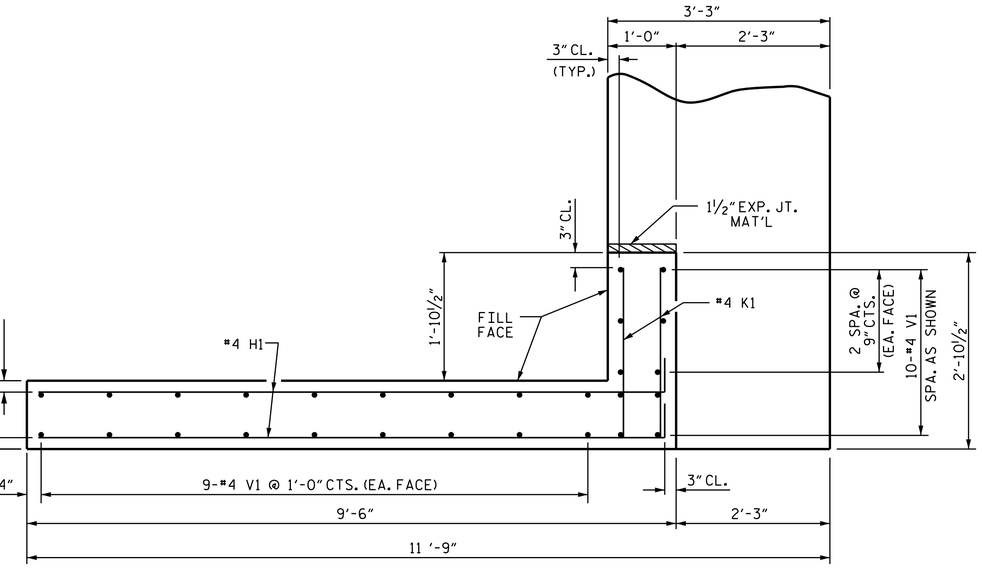

PLAN OF WING (W2)

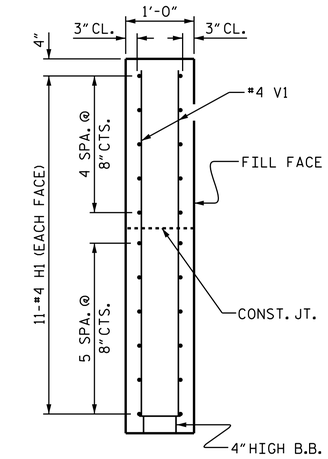

SECTION X-X

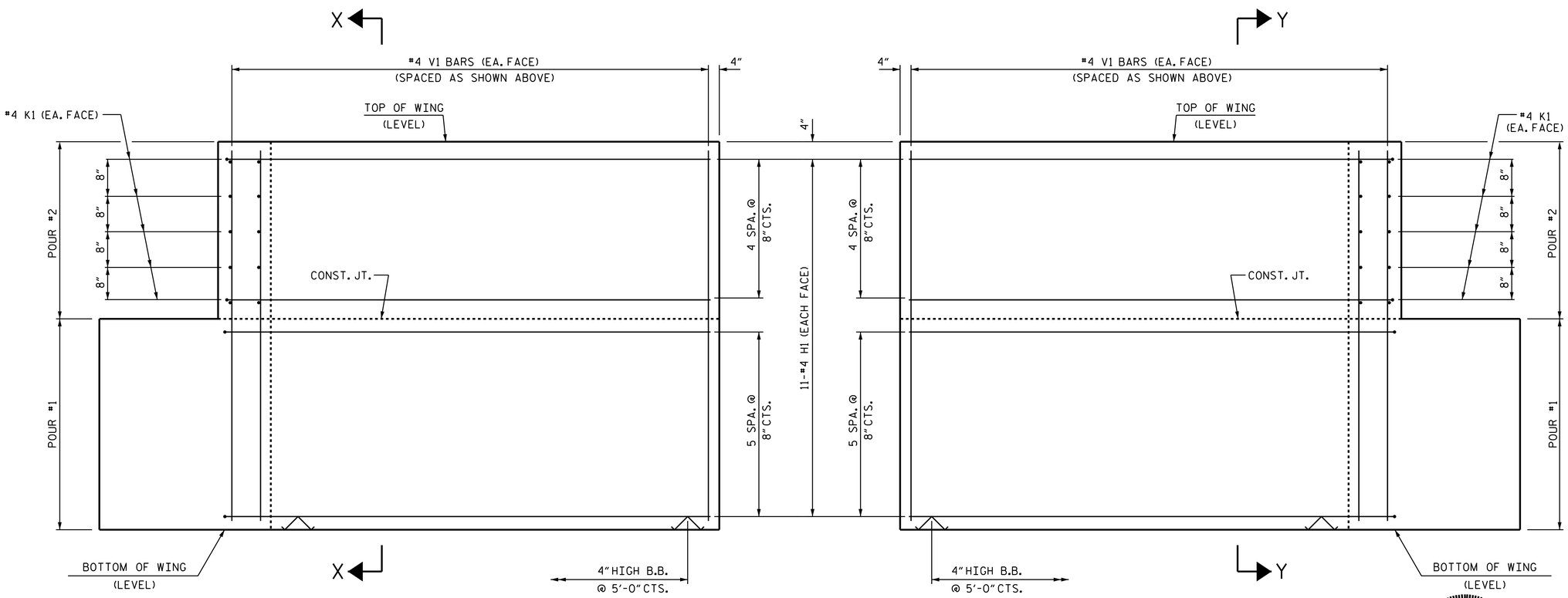

ELEVATION OF WING (W1)

ELEVATION OF WING (W2)

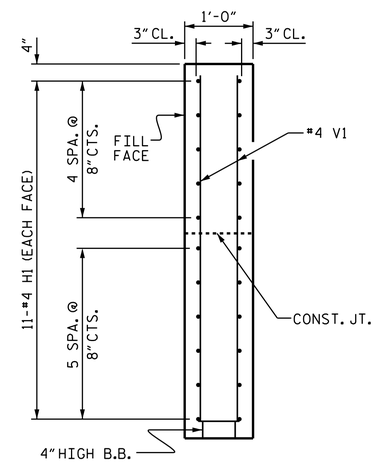

SECTION Y-Y

WING DETAILS

PROJECT NO. B-5129A

PAMLICO COUNTY

STATION: 13+68.50 -L-

SHEET 3 OF 4

STATE OF NORTH CAROLINA
DEPARTMENT OF TRANSPORTATION
RALEIGH

SUBSTRUCTURE

END BENT
WING DETAILS

NORTH CAROLINA PROFESSIONAL SEAL 22005 ENGINEER A. KEITH PASCHAL

DocuSigned by: A. Keith Paschal
F8B6AD6DB2FC48F...
12/5/2014

REVISIONS								SHEET NO.
NO.	BY:	DATE:	NO.	BY:	DATE:			S-17
1			3					TOTAL SHEETS
2			4					25

DRAWN BY : B. N. BARODAWALA DATE : 11-25-13
CHECKED BY : D. G. ELY DATE : 1-7-14
DESIGN ENGINEER OF RECORD: M. L. RORIE DATE : 5-23-14

04-DEC-2014 15:09
R:\Structures\Final Plans\B-5129A_SD_EB.dgn
kpaschal