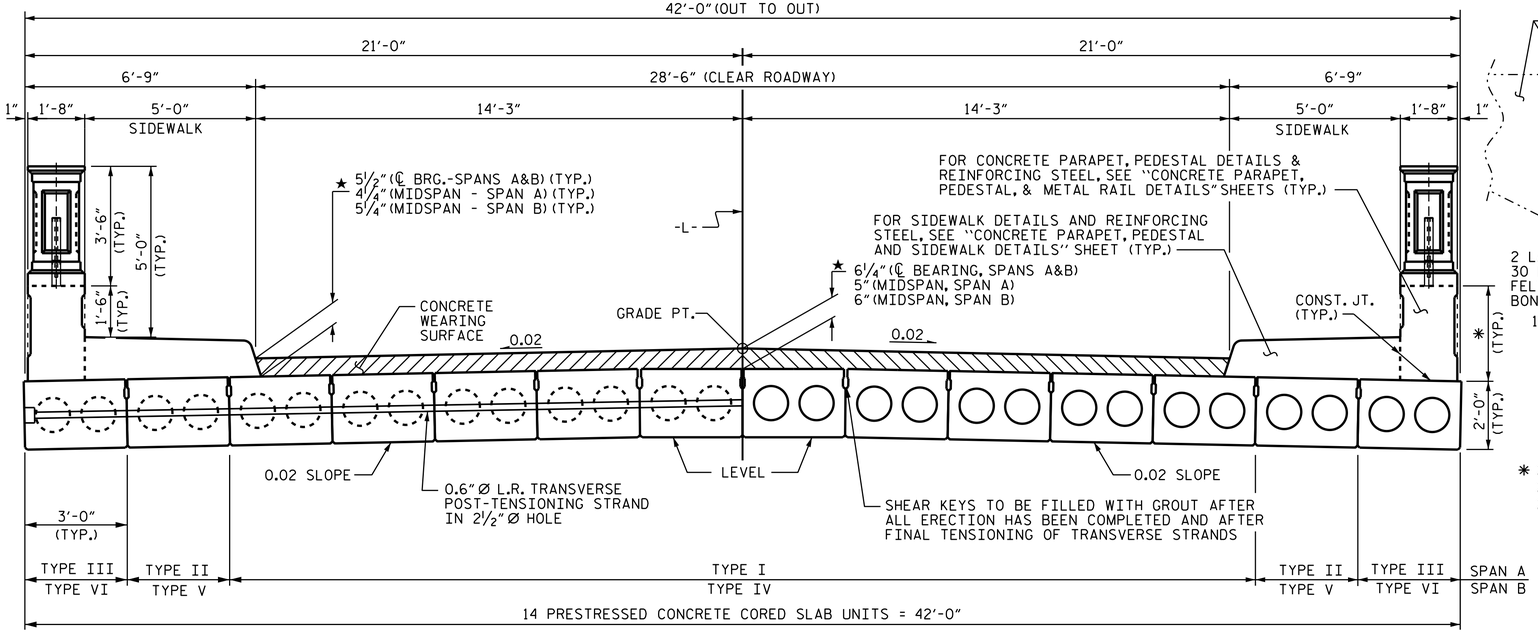

HALF SECTION
AT INTERMEDIATE DIAPHRAGMS

HALF SECTION
THROUGH VOIDS

TYPICAL SECTION

★ THE MINIMUM & MAXIMUM PARAPET AND CONCRETE WEARING SURFACE THICKNESSES ARE SHOWN. THE HEIGHT OF THE SIDEWALK, THE PARAPET AND THE CONCRETE WEARING SURFACE THICKNESS VARIES WHILE THE TOP OF THE PARAPET FOLLOWS THE PROFILE OF THE GUTTERLINE.

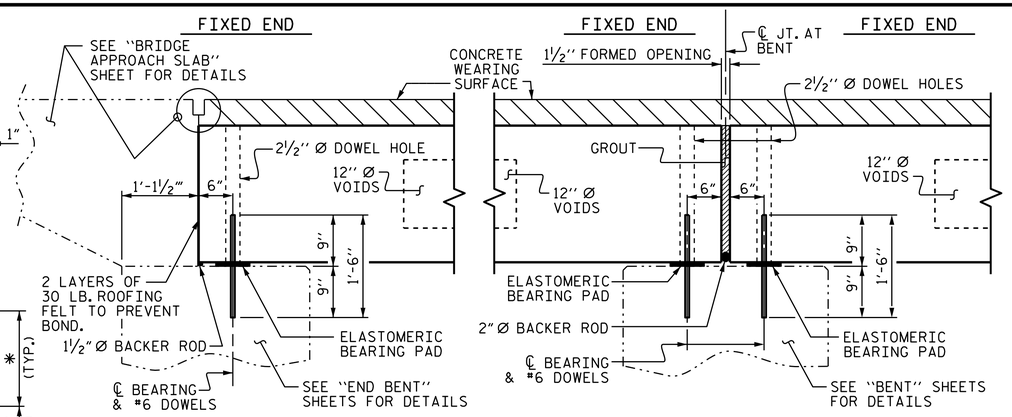

SECTION AT END BENT

SECTION AT BENT

✱ 2'-8⅜" @ ℄ BRG.
2'-7⅛" @ MIDSPAN A
2'-8⅛" @ MIDSPAN B

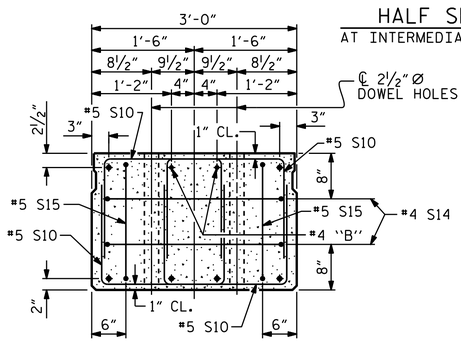

END ELEVATION

SHOWING PLACEMENT OF DOUBLE STIRRUPS AND LOCATION OF DOWEL HOLES. (STRAND LAYOUT NOT SHOWN.) INTERIOR SLAB SECTION SHOWN-EXTERIOR SLAB SECTION SIMILAR EXCEPT SHEAR KEY LOCATION.

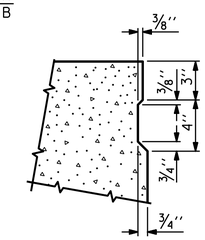

SHEAR KEY DETAIL

NOTE: OMIT SHEAR KEY ON OUTSIDE FACE OF EXTERIOR CORED SLABS.

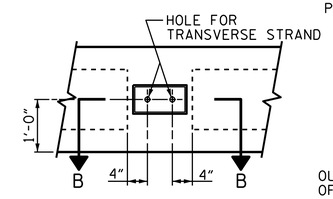

ELEVATION VIEW

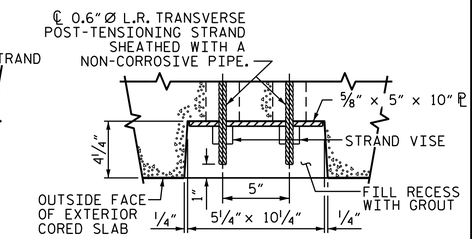

SECTION B-B

GROUTED RECESS AT END OF POST-TENSIONED STRAND CORED SLABS

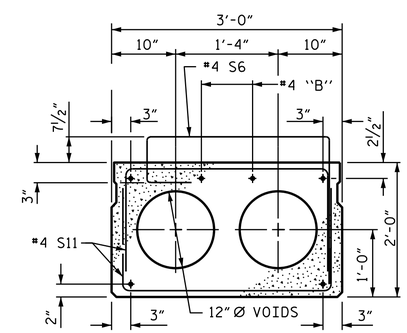

INTERIOR SLAB SIDEWALK SECTION (TYPE II & V)

(FOR PRESTRESSED STRAND LAYOUT, SEE INTERIOR SLAB SECTION - TYPE I SPAN A OR TYPE IV SPAN B)

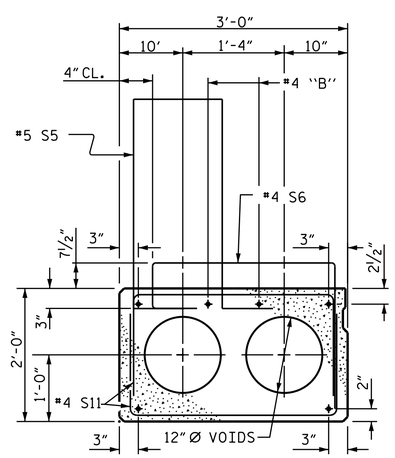

EXTERIOR SLAB SIDEWALK SECTION (TYPE III & VI)

(FOR PRESTRESSED STRAND LAYOUT, SEE INTERIOR SLAB SECTION - TYPE I SPAN A OR TYPE IV SPAN B)

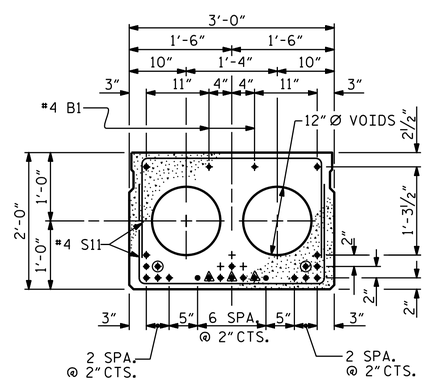

INTERIOR SLAB SECTION (TYPE I SPAN A)

(22 STRANDS REQUIRED)

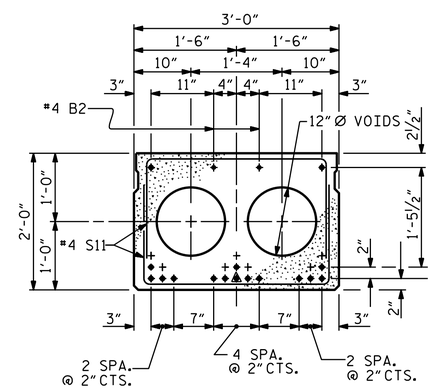

INTERIOR SLAB SECTION (TYPE IV SPAN B)

(16 STRANDS REQUIRED)

0.6" Ø LOW RELAXATION STRAND LAYOUT

△ STRANDS DEBONDED FOR 4'-0" FROM END OF GIRDER, SEE STANDARD SPECIFICATIONS, ARTICLE 1078-7.

⊙ STRANDS DEBONDED FOR 6'-0" FROM END OF GIRDER SEE STANDARD SPECIFICATIONS, ARTICLE 1078-7.

NORTH CAROLINA PROFESSIONAL SEAL 22005 ENGINEER A. KEITH PASCHAL

DocuSigned by: A. Keith Paschal
F8B6AD6DB2FC48F...
12/5/2014

PROJECT NO. B-5129A
PAMLICO COUNTY
STATION: 13+68.50 -L-

STATE OF NORTH CAROLINA
DEPARTMENT OF TRANSPORTATION
RALEIGH

3'-0" X 2'-0"
PRESTRESSED CONCRETE
CORED SLAB UNIT

REVISIONS						SHEET NO.
NO.	BY:	DATE:	NO.	BY:	DATE:	S-5
1			3			TOTAL SHEETS
2			4			25

(SHT 1C) STD. NO. PCS4

DRAWN BY : B. N. BARODAWALA DATE : 1-9-14
CHECKED BY : D. G. ELY DATE : 2-3-14
DESIGN ENGINEER OF RECORD: M. L. RORIE DATE : 5-23-14

04-DEC-2014 15:08
R:\Structures\Final Plans\B-5129A_SD_CS.dgn
kpaschal