PROJECT REFERENCE NO.	SHEET NO.
B-5129A	ECS 1

NORTH CAROLINA PROFESSIONAL SEAL 022582 ENGINEER PAUL KI-BUN CHAN
DocuSigned by: Paul Chan 12/11/2014
F83C4985EEEF4A2...

USE FOR LIGHTING CONSTRUCTION ONLY

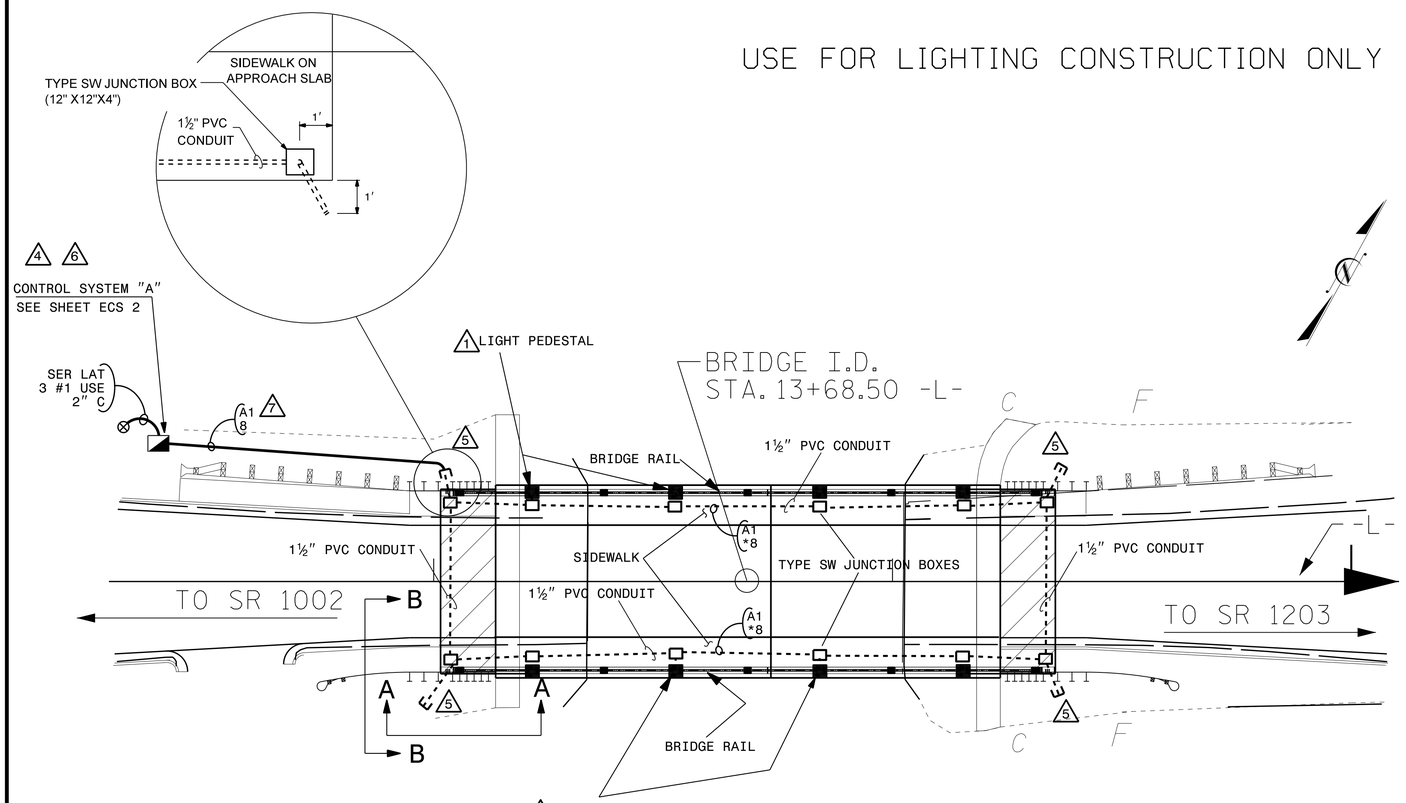

CONDUIT SYSTEM LAYOUT 3

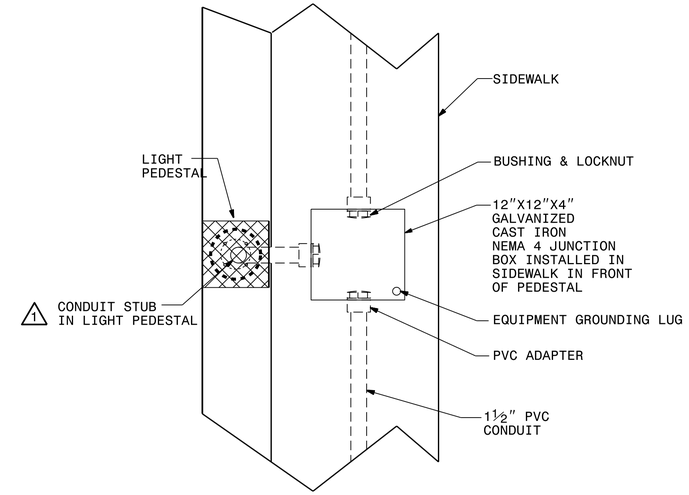

VIEW C-C

PEDESTAL AND JUNCTION BOX

TABLE "A"
CIRCUITRY CONDUCTOR CONDUIT TYPE & SIZE

PLAN SYMBOL	DESCRIPTION		CONTRACT ITEM
8	2 #8 Ø 1 #10G 1.5" P	2 AWG SIZE 8 CONDUCTOR (BK & RD) 1 AWG SIZE 10 GROUNDING CONDUCTOR 1.5" PVC CONDUIT	2 - 8 W/G FEEDER CIRCUIT IN 1.5" CONDUIT
*8	2 #8 Ø 1 #10G	2 AWG SIZE 8 CONDUCTOR (BK & RD) 1 AWG SIZE 10 GROUNDING CONDUCTOR	2 - 8 W/G FEEDER CIRCUIT

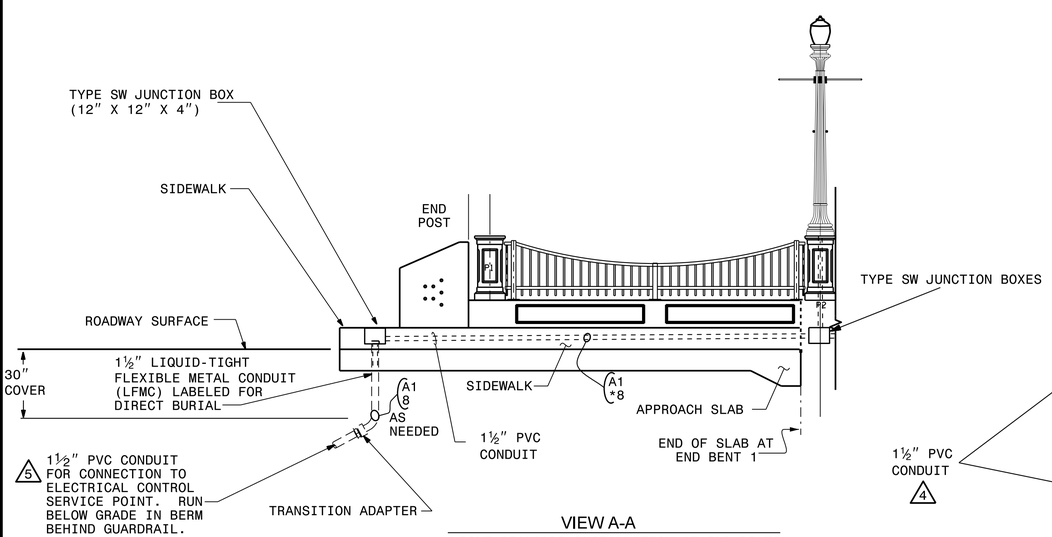

VIEW A-A

LIGHT STANDARD INSTALLATION AT END BENTS

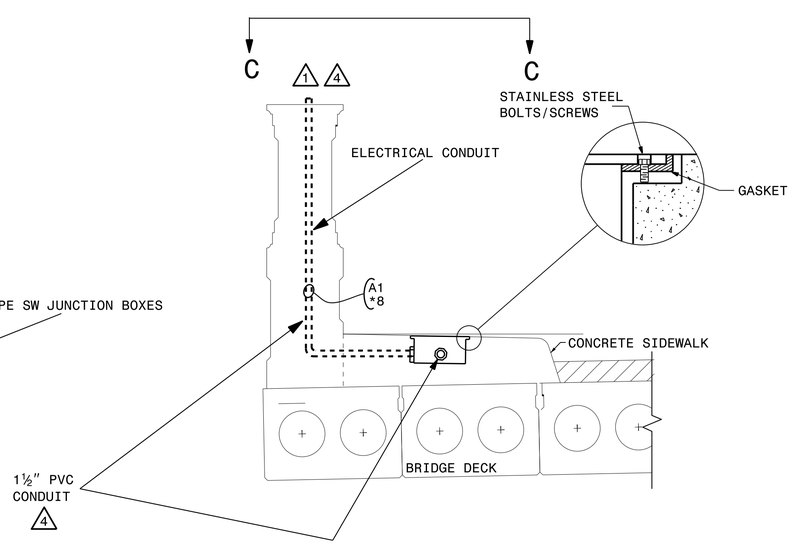

VIEW B-B

CONDUIT AND JUNCTION BOX INSTALLATION AT LIGHT PEDESTALS

PROJECT NO. B-5129A

PAMLICO COUNTY

STATION: 13+68.50 -L-

Rev.	Date	Description	Approved
2			
1			

NORTH CAROLINA DEPARTMENT OF TRANSPORTATION

ROADWAY DESIGN — LIGHTING/ELECTRICAL SECTION

ELECTRICAL CONDUIT SYSTEM

REPLACE BRIDGE OVER NORTH PRONG OF BAY RIVER ON NC 304 IN BAYBORO

PAMLICO COUNTY

Drawn By:	Approved By:	Dwg No.:
AB	PKC	

02/03/98

11-DEC-2014 12:16
A:\Lighting_Electrical\Lighting Design\B-5129A_l&e_ECS_el.dgn
$$$$USERNAME$$$$