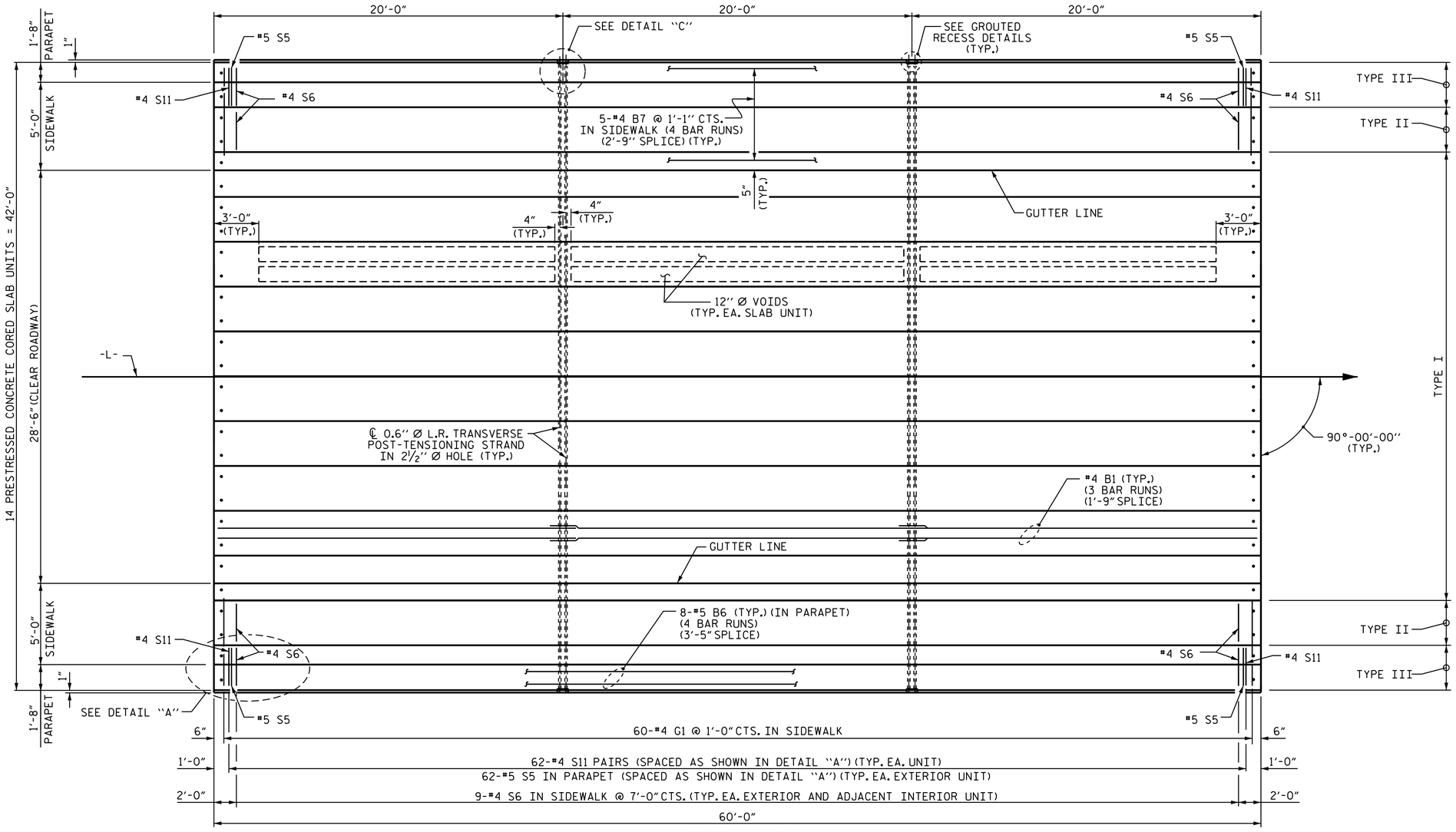

SPAN "A"

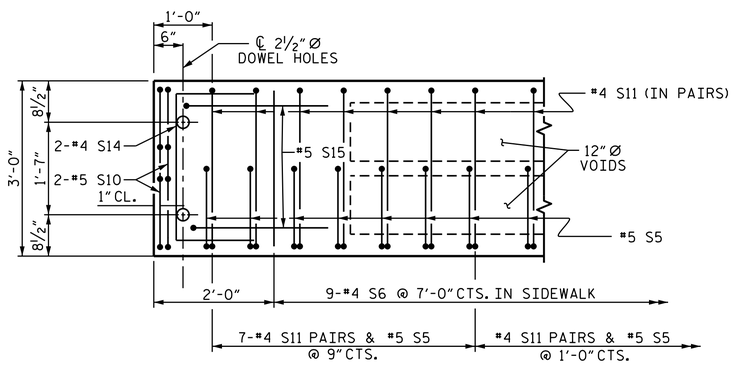

DETAIL "A"

NOTE: EXTERIOR AND ADJACENT INTERIOR UNIT SHOWN - OTHER INTERIOR UNITS SIMILAR EXCEPT OMIT #4 S5 & #4 S6 IN SIDEWALK.

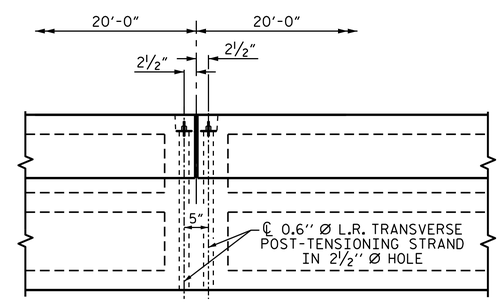

DETAIL "C"

#4 'S' BARS MAY BE SHIFTED AS NECESSARY TO MAINTAIN 1" CLEAR TO GROUTED RECESS AND 2½" Ø TRANSVERSE POST-TENSIONING STRAND HOLES

NORTH CAROLINA PROFESSIONAL SEAL 22005 ENGINEER A. KEITH PASCHAL

DocuSigned by: A. Keith Paschal F8B6AD6DB2FC48F...

12/5/2014

PROJECT NO. B-5129A

PAMLICO COUNTY

STATION: 13+68.50 -L-

SHEET 1 OF 2

STATE OF NORTH CAROLINA
DEPARTMENT OF TRANSPORTATION
RALEIGH

PLAN OF SPAN "A"
90° SKEW

REVISIONS						SHEET NO.
NO.	BY:	DATE:	NO.	BY:	DATE:	S-6
1			3			TOTAL SHEETS
2			4			25

DRAWN BY : B. N. BARODAWALA DATE : 1-9-14
CHECKED BY : D. G. ELY DATE : 2-4-14
DESIGN ENGINEER OF RECORD: M. L. RORIE DATE : 5-23-14

04-DEC-2014 15:08
R:\Structures\Final Plans\B-5129A_SD_CS.dgn
kpaschal