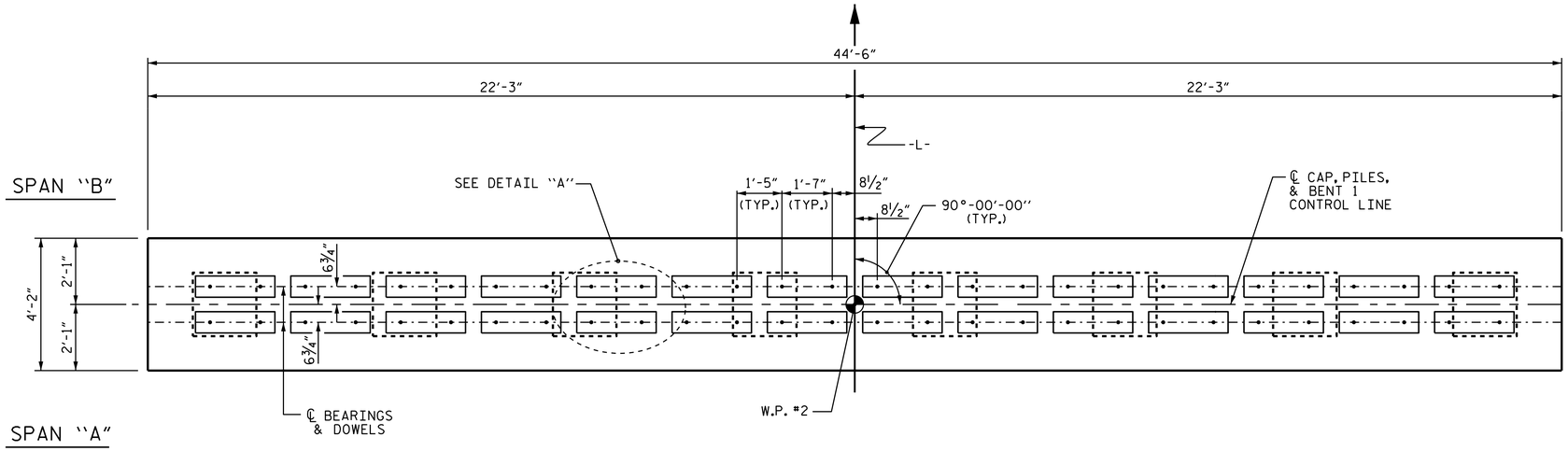

PLAN

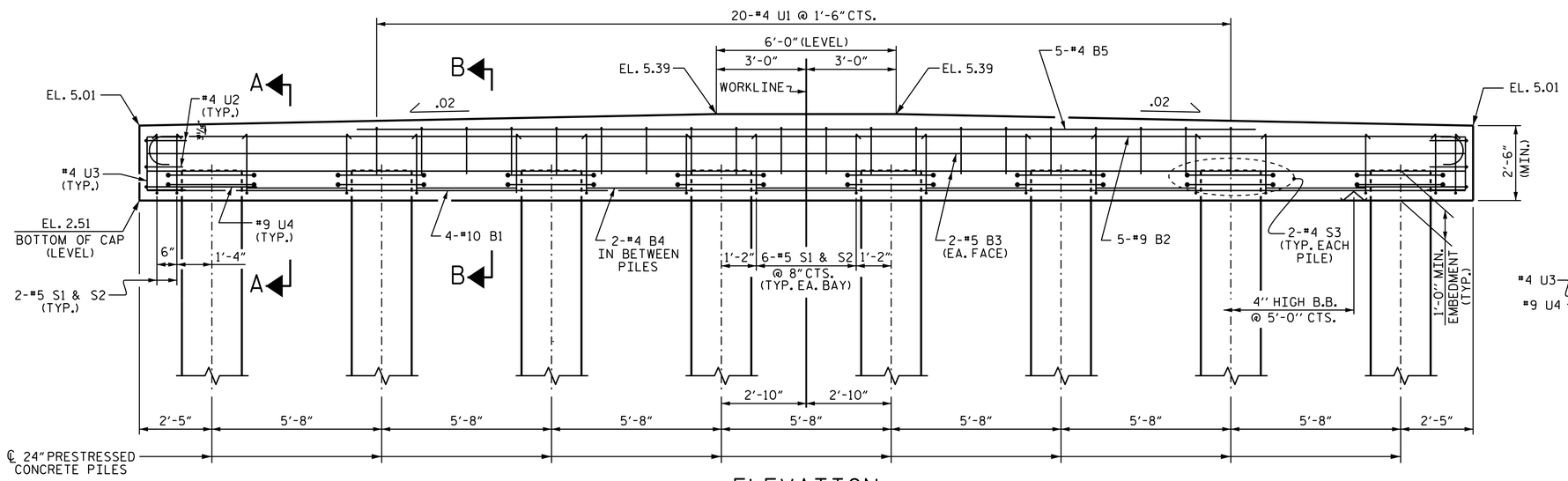

ELEVATION

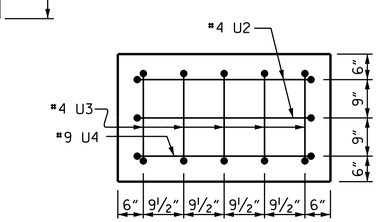

END VIEW

(TYP. EA. END)

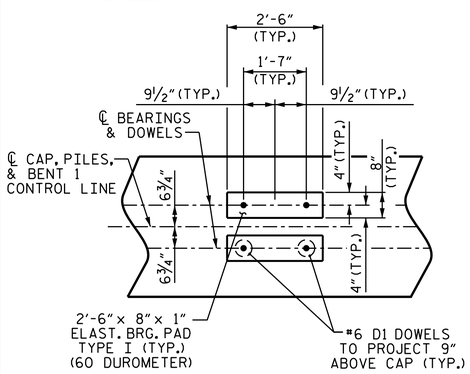

DETAIL "A"

(DIMENSIONS ARE TYPICAL EACH BEARING)

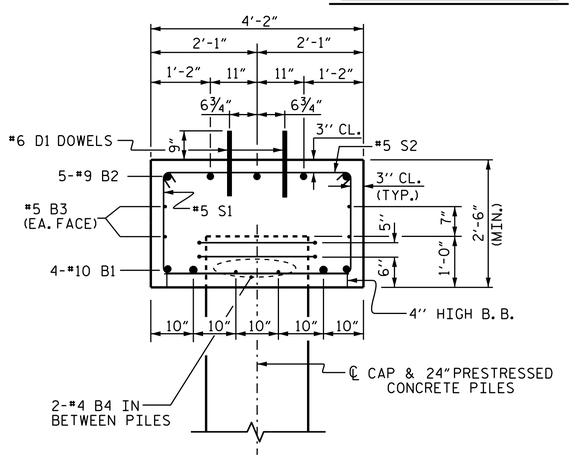

SECTION A-A

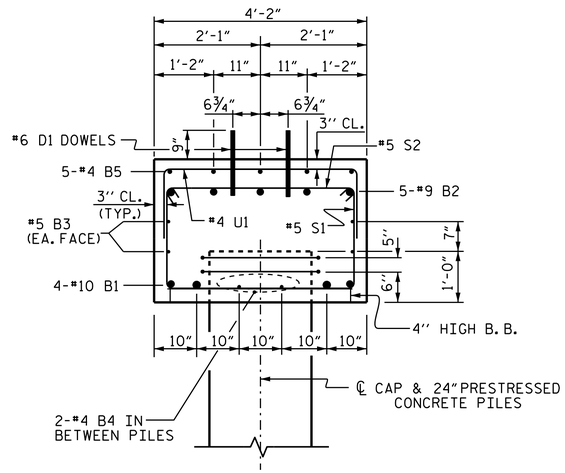

SECTION B-B

NOTES

STIRRUPS IN CAP MAY BE SHIFTED AS NECESSARY TO CLEAR DOWELS.

ALL BAR SUPPORTS USED IN THE BENT CAPS AND ALL INCIDENTAL REINFORCING STEEL SHALL BE EPOXY COATED IN ACCORDANCE WITH THE STANDARD SPECIFICATIONS.

THE CONCRETE IN THE BENT PILES SHALL CONTAIN SILICA FUME. SILICA FUME SHALL BE SUBSTITUTED FOR 5% OF THE PORTLAND CEMENT BY WEIGHT. IF THE OPTION OF ARTICLE 1024-1 OF THE STANDARD SPECIFICATIONS TO PARTIALLY SUBSTITUTE CLASS F FLY ASH FOR PORTLAND CEMENT IS EXERCISED, THEN THE RATE OF FLY ASH SUBSTITUTION SHALL BE REDUCED TO 1.0 LB OF FLY ASH PER 1.0 LB OF CEMENT. NO PAYMENT WILL BE MADE FOR THIS SUBSTITUTION AS IT IS CONSIDERED INCIDENTAL TO THE VARIOUS PAY ITEMS.

BILL OF MATERIAL

BENT 1

BAR	NO.	SIZE	TYPE	LENGTH	WEIGHT
* B1	4	#10	STR	44'-0"	757
* B2	5	#9	5	46'-4"	788
* B3	4	#5	STR	44'-0"	184
* B4	14	#4	STR	3'-4"	31
* B5	5	#4	STR	30'-0"	100
* D1	56	#6	STR	1'-6"	126
* S1	46	#5	2	8'-6"	408
* S2	46	#5	1	4'-7"	220
* S3	16	#4	3	10'-9"	115
* U1	20	#4	4	6'-8"	89
* U2	4	#4	4	6'-6"	17
* U3	10	#4	4	4'-10"	32
* U4	2	#9	4	10'-10"	74

*EPOXY CONCRETE REINFORCING STEEL LBS. 2941

CLASS AA CONCRETE ★ C.Y. 17.5

★CONCRETE DISPLACED BY THE 24" PRESTRESSED CONCRETE PILES HAS BEEN DEDUCTED FROM THE CONCRETE QUANTITY.

24" PRESTRESSED CONCRETE PILES
NO. = 8 LIN. FT. = 640

PILE REDRIVES EA. NO. = 4

PREDRILLING PILES LIN. FT. = 320

BAR TYPES

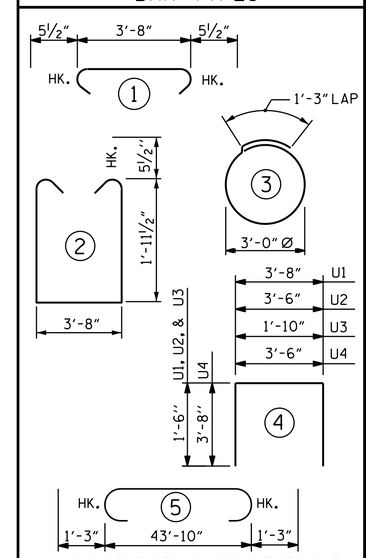

ALL BAR DIMENSIONS ARE OUT TO OUT

PROJECT NO. B-5129A

PAMLICO COUNTY

STATION: 13+68.50 -L-

STATE OF NORTH CAROLINA
DEPARTMENT OF TRANSPORTATION
RALEIGH

SUBSTRUCTURE

BENT 1

NORTH CAROLINA PROFESSIONAL SEAL 22005 ENGINEER A. KEITH PASCHAL

DocuSigned by: A. Keith Paschal
F8B6AD6DB2FC48F...

12/5/2014

REVISIONS								SHEET NO.
NO.	BY:	DATE:	NO.	BY:	DATE:			S-19
1			3					TOTAL SHEETS
2			4					25

DRAWN BY : B. N. BARODAWALA DATE : 11-25-13
CHECKED BY : D. G. ELY DATE : 12-19-13
DESIGN ENGINEER OF RECORD: M. L. RORIE DATE : 5-23-14

04-DEC-2014 15:09
R:\Structures\Final Plans\B-5129A_SD_BT.dgn
kpaschal