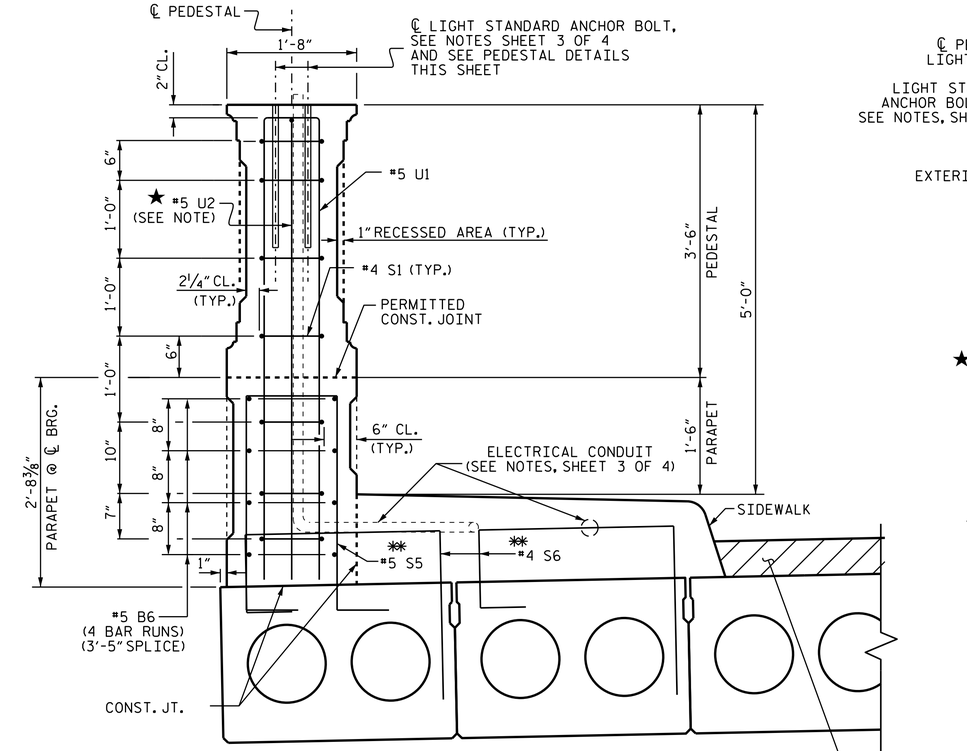

SECTION THRU PEDESTAL

** FOR DETAILS SEE "3'-0" X 2'-0" PRESTRESSED CONCRETE CORED SLAB UNIT" SHEET

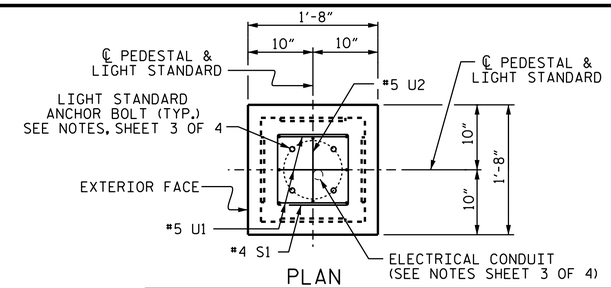

PLAN

ELECTRICAL CONDUIT AND LIGHT STANDARD ANCHOR BOLTS ARE NOT REQUIRED AT ALL PEDESTAL LOCATIONS, SEE SHEET 1 OF 4 FOR LOCATION OF LIGHT STANDARDS.

★ REINFORCING STEEL MAY BE SHIFTED SLIGHTLY TO ACCOMMODATE ELECTRICAL CONDUIT.

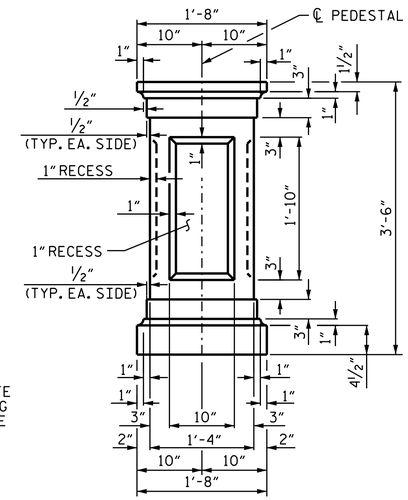

ELEVATION

PEDESTAL DETAILS

(DIMENSIONS SHOWN ARE TYPICAL FOR EACH FACE OF PEDESTAL)

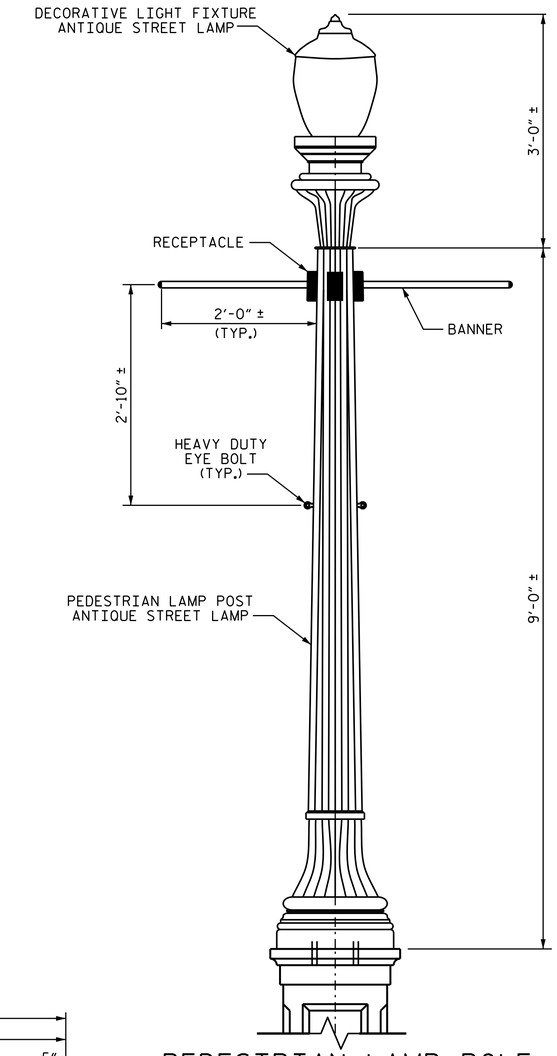

PEDESTRIAN LAMP POLE

BAR TYPES

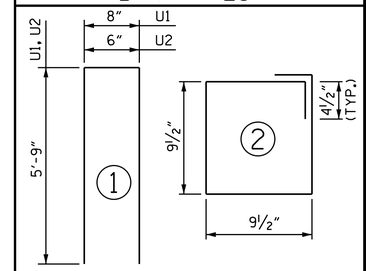

ALL BAR DIMENSIONS ARE OUT TO OUT

BILL OF MATERIAL FOR CONCRETE PARAPET AND PEDESTALS ON BRIDGE

BAR	NO.	SIZE	TYPE	LENGTH	WEIGHT
* B6	64	#5	STR	30'-3"	2019
* S1	98	#4	2	3'-11"	256
* U1	42	#5	1	12'-2"	533
* U2	14	#5	1	12'-0"	175

* EPOXY COATED REINFORCING STEEL 2983 LBS.

CLASS AA CONCRETE ON BRIDGE
CONCRETE PARAPET 34.5 C. Y.
14 PEDESTALS 3.3 C. Y.
TOTAL 37.8 C. Y.

BILL OF MATERIAL FOR SIDEWALK ON BRIDGE

BAR	NO.	SIZE	TYPE	LENGTH	WEIGHT
* B7	40	#4	STR.	29'-6"	788
* G1	220	#4	STR.	4'-6"	661

* EPOXY COATED REINFORCING STEEL 1449 LBS.

CLASS AA CONCRETE
SIDEWALK ON BRIDGE 42.8 C. Y.

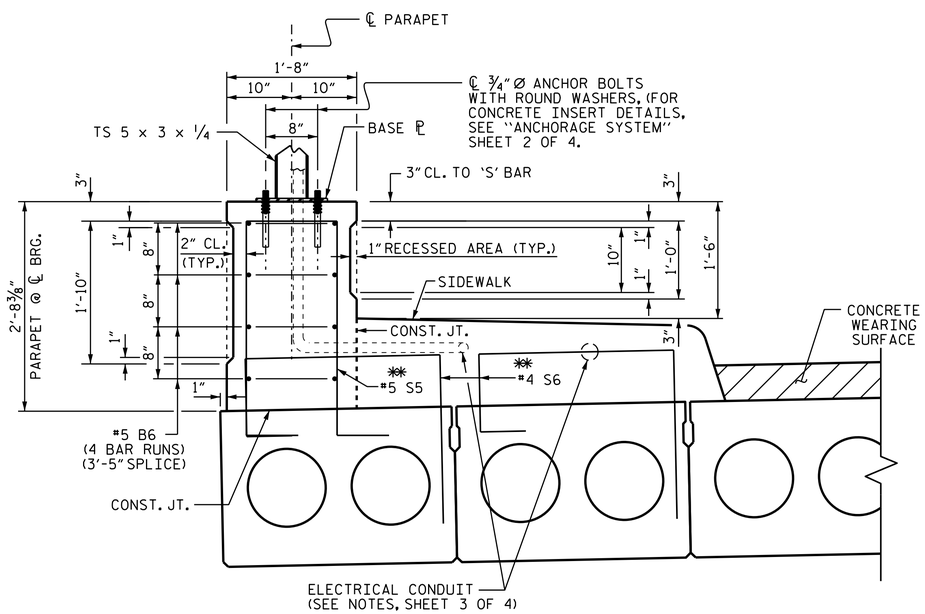

SECTION B-B

** FOR DETAILS SEE "3'-0" X 2'-0" PRESTRESSED CONCRETE CORED SLAB UNIT" SHEET

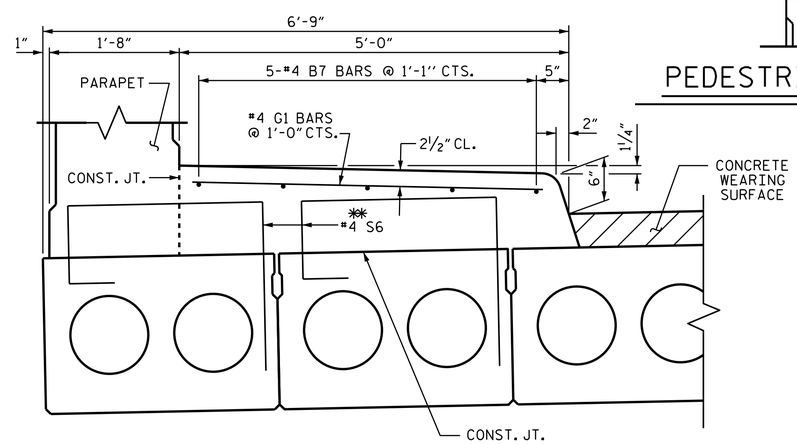

SECTION THRU SIDEWALK

** FOR DETAIL SEE SHEET, '3'-0" X 2'-0" PRESTRESSED CONCRETE CORED SLAB UNIT"

GROOVED CONTRACTION JOINTS, ½" IN DEPTH, SHALL BE TOOLED IN ALL EXPOSED FACES OF THE SIDEWALK IN ACCORDANCE WITH ARTICLE 825-10(B) OF THE STANDARD SPECIFICATIONS. THE CONTRACTION JOINTS SHALL BE LOCATED AT A SPACING OF 8FT. TO 10FT. BETWEEN EXPANSION JOINTS. NO CONTRACTION JOINTS WILL BE REQUIRED FOR SEGMENTS LESS THAN 10 FEET IN LENGTH.

NORTH CAROLINA PROFESSIONAL SEAL 22005 ENGINEER A. KEITH PASCHAL

DocuSigned by: A. Keith Paschal F8B6AD6DB2FC48F...

12/5/2014

PROJECT NO. B-5129A
PAMLICO COUNTY
STATION: 13+68.50 -L-

SHEET 4 OF 4

STATE OF NORTH CAROLINA
DEPARTMENT OF TRANSPORTATION
RALEIGH

SUPERSTRUCTURE

CONCRETE PARAPET, PEDESTAL AND SIDEWALK DETAILS

REVISIONS						SHEET NO.
NO.	BY:	DATE:	NO.	BY:	DATE:	S-11
1			3			TOTAL SHEETS
2			4			25

DRAWN BY : B. N. BARODAWALA DATE : 1-9-14
CHECKED BY : D. G. ELY DATE : 2-4-14
DESIGN ENGINEER OF RECORD: A. K. PASCHAL DATE : 5-23-14

04-DEC-2014 15:08
R:\Structures\Final Plans\B-5129A_SD_CS.dgn
kpaschal