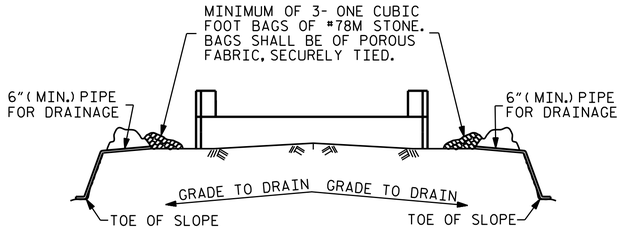

BAGGED STONE AND PIPE SHALL BE PLACED IMMEDIATELY AFTER COMPLETION OF END BENT EXCAVATION. PIPE MAY BE EITHER CONCRETE, CORRUGATED STEEL, CORRUGATED ALUMINUM ALLOY, OR CORRUGATED PLASTIC. PERFORATED PIPE WILL NOT BE ALLOWED.

BAGGED STONE SHALL REMAIN IN PLACE UNTIL THE ENGINEER DIRECTS THAT IT BE REMOVED. THE CONTRACTOR SHALL REMOVE AND DISPOSE OF SILT ACCUMULATIONS AT BAGGED STONE WHEN SO DIRECTED BY THE ENGINEER. BAGS SHALL BE REMOVED AND REPLACED WHENEVER THE ENGINEER DETERMINES THAT THEY HAVE DETERIORATED AND LOST THEIR EFFECTIVENESS.

NO SEPARATE PAYMENT WILL BE MADE FOR THIS WORK AND THE ENTIRE COST OF THIS WORK SHALL BE INCLUDED IN THE UNIT CONTRACT PRICE BID FOR THE SEVERAL PAY ITEMS.

TEMPORARY DRAINAGE AT END BENT

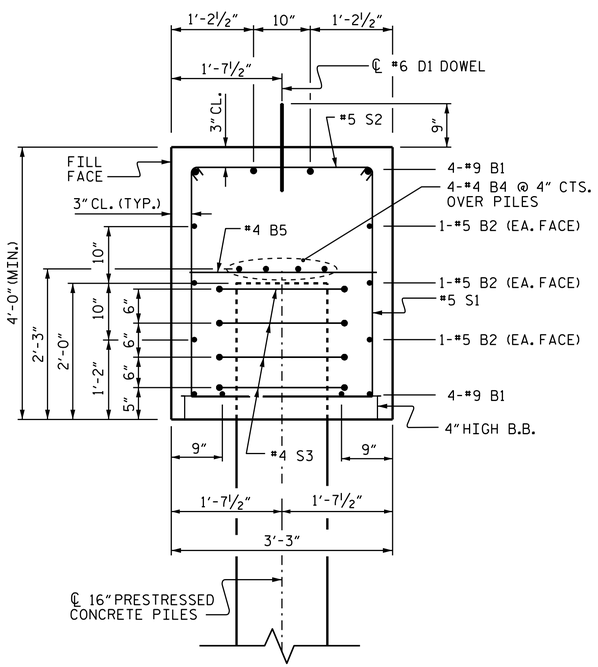

SECTION A-A

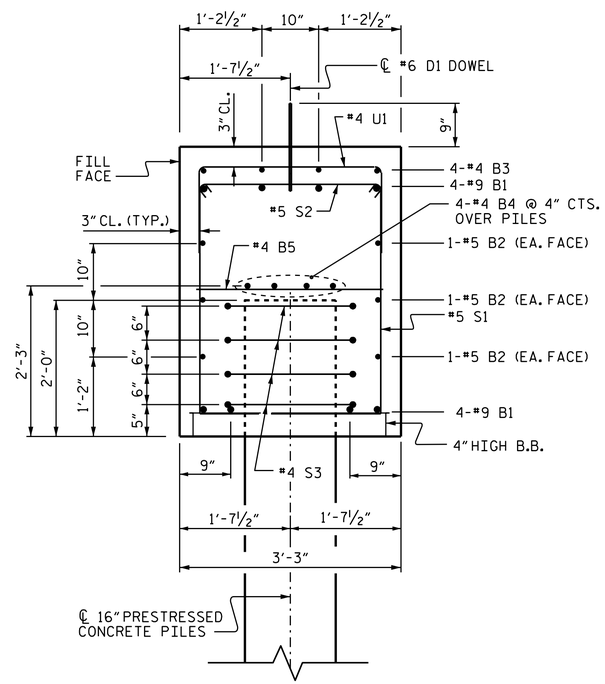

SECTION B-B

BAR TYPES

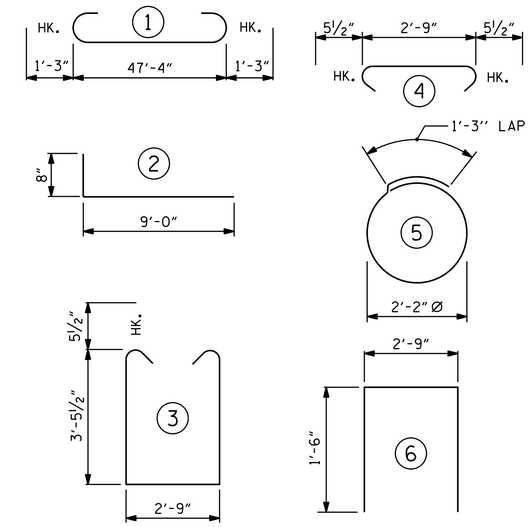

ALL BAR DIMENSIONS ARE OUT TO OUT.

END BENT 1	END BENT 2
16" PRESTRESSED CONCRETE PILES	16" PRESTRESSED CONCRETE PILES
NO. = 6 LIN. FT. = 480	NO. = 6 LIN. FT. = 480
PILE REDRIVES EA. NO. = 3	PILE REDRIVES EA. NO. = 3

BILL OF MATERIAL FOR ONE END BENT

BAR	NO.	SIZE	TYPE	LENGTH	WEIGHT
✱ B1	8	#9	1	49'-10"	1355
✱ B2	6	#5	STR	47'-6"	297
✱ B3	4	#4	STR	22'-10"	61
✱ B4	8	#4	STR	25'-2"	134
✱ B5	12	#4	STR	2'-9"	22
✱ D1	28	#6	STR	1'-6"	63
✱ H1	44	#4	2	9'-8"	284
✱ K1	20	#4	STR	2'-4"	31
✱ S1	47	#5	3	10'-7"	519
✱ S2	47	#5	4	3'-8"	180
✱ S3	24	#4	5	8'-1"	130
✱ U1	16	#4	6	5'-9"	62
✱ V1	56	#4	STR	6'-10"	256

✱ EPOXY COATED REINFORCING STEEL 3394 LBS.

CLASS AA CONCRETE BREAKDOWN

POUR #1 CAP, & LOWER PART OF WINGS ★ 26.2 C.Y.

POUR #2 UPPER PART OF WINGS 2.8 C.Y.

TOTAL CLASS AA CONCRETE ★ 29.0 C.Y.

★ CONCRETE DISPLACED BY THE 16" PRESTRESSED CONCRETE PILES HAS BEEN DEDUCTED FROM THE CONCRETE QUANTITY.

PROJECT NO. B-5129A
PAMLICO COUNTY
STATION: 13+68.50 -L-

SHEET 4 OF 4

STATE OF NORTH CAROLINA
DEPARTMENT OF TRANSPORTATION
RALEIGH

SUBSTRUCTURE

END BENT 1 & 2 DETAILS

NORTH CAROLINA PROFESSIONAL SEAL 22005 ENGINEER A. KEITH PASCHAL

DocuSigned by: A. Keith Paschal F8B6AD6DB2FC48F...

12/5/2014

REVISIONS							SHEET NO.
NO.	BY:	DATE:	NO.	BY:	DATE:		S-18
1			3				TOTAL SHEETS
2			4				25

DRAWN BY : B. N. BARODAWALA DATE : 11-25-13
CHECKED BY : D. G. ELY DATE : 1-7-14
DESIGN ENGINEER OF RECORD: M. L. RORIE DATE : 5-23-14

04-DEC-2014 15:09
R:\Structures\Final Plans\B-5129A_SD_EB.dgn
kpaschal