TIP PROJECT: B-5129A

T.I.P. NO.	SHEET NO.
B-5129A	UC-1

STATE OF NORTH CAROLINA
DIVISION OF HIGHWAYS

UTILITY CONSTRUCTION PLANS
PAMLICO COUNTY

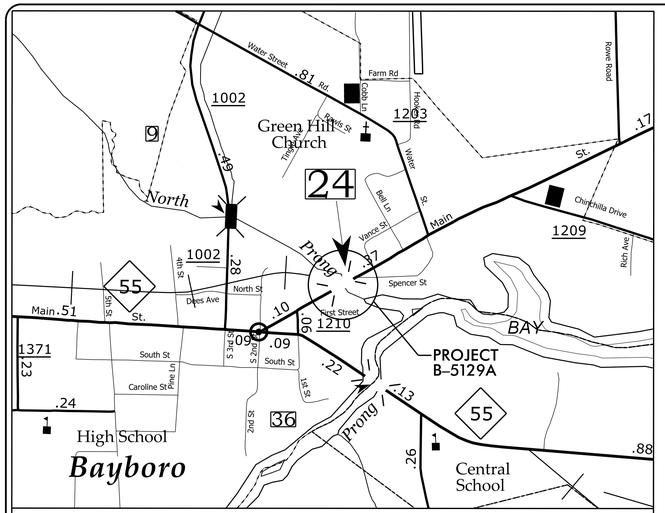

VICINITY MAP
(N.T.S.)

LOCATION: BRIDGE #24 OVER NORTH PRONG OF BAY RIVER ON NC 304

TYPE OF WORK: SANITARY SEWER FORCE MAIN RELOCATION

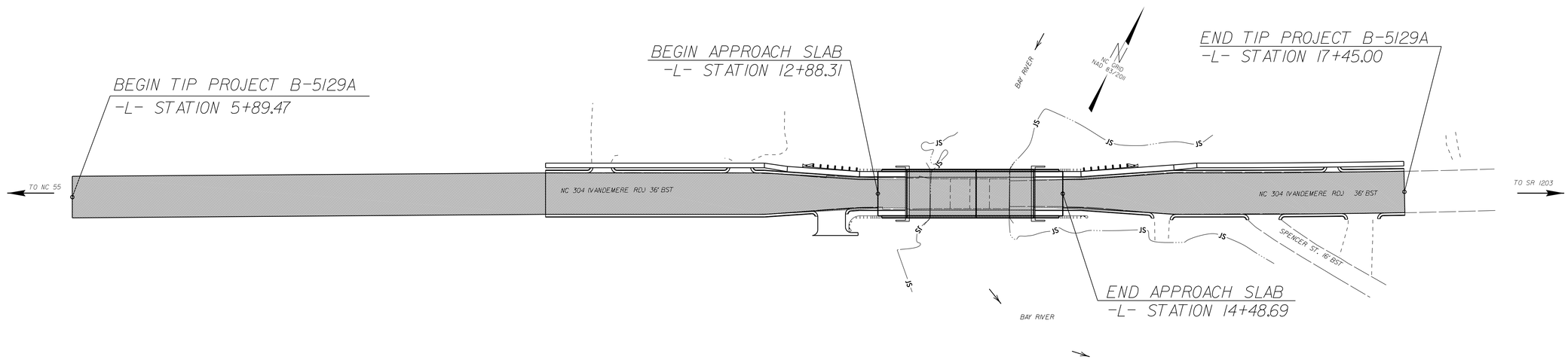

GRAPHIC SCALES

50 25 0 50 100
PLANS

50 25 0 50 100
PROFILE (HORIZONTAL)

10 5 0 10 20
PROFILE (VERTICAL)

INDEX OF SHEETS

SHEET NO.	DESCRIPTION
UC-1	TITLE SHEET
UC-2	SUMMARY OF QUANTITIES
UC-3	UTILITY CONSTRUCTION SHEET
UC-4	DETAILS SHEET

UTILITY OWNER ON PROJECT

(1) BAY RIVER MSD

SEAL

NORTH CAROLINA PROFESSIONAL SEAL 16710 ENGINEER DWAYNE H. ALLIGOOD

Dwayne Alligood
E7E42C259C374D1...
12/8/2014

PREPARED IN THE OFFICE OF:
DIVISION OF HIGHWAYS
DIVISION 2 – DDC

P.O. BOX 1587
GREENVILLE, NC 27835
PHONE (252) 439-2800
FAX (252) 830-3352

DWAYNE H. ALLIGOOD, PE — UTILITIES ENGINEER
VAN TRAN — UTILITIES PROJECT DESIGNER

09/08/99
08-DEC-2014 13:56
G:\PROJECTS\PAMLICO\pamlico#24 (B-5129A)\B-5129A_DDC2_PSH_UC1.DGN
$$$$USERNAME$$$$