PROJECT REFERENCE NO.	SHEET NO.
B-5129A	ECS 2

NORTH CAROLINA PROFESSIONAL SEAL 022582 ENGINEER PAUL KI-BUN CHAN

DocuSigned by: Paul Chan 12/11/2014 F83C4985EEEF4A2

USE FOR LIGHTING CONSTRUCTION ONLY

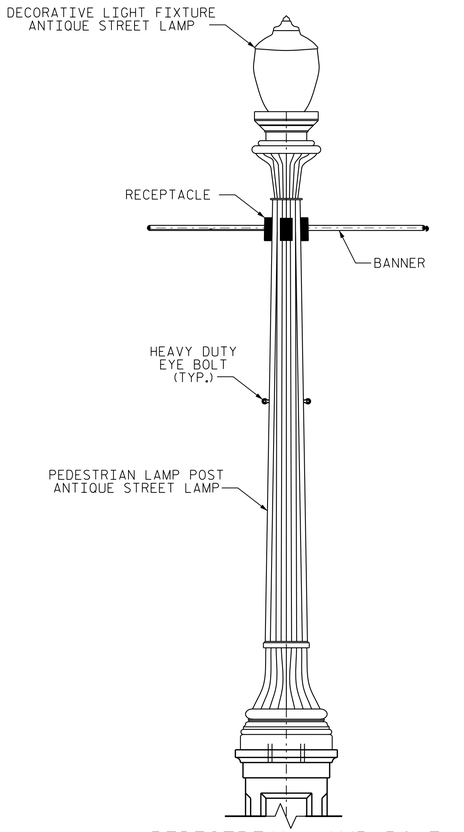

PEDESTRIAN LAMP POLE

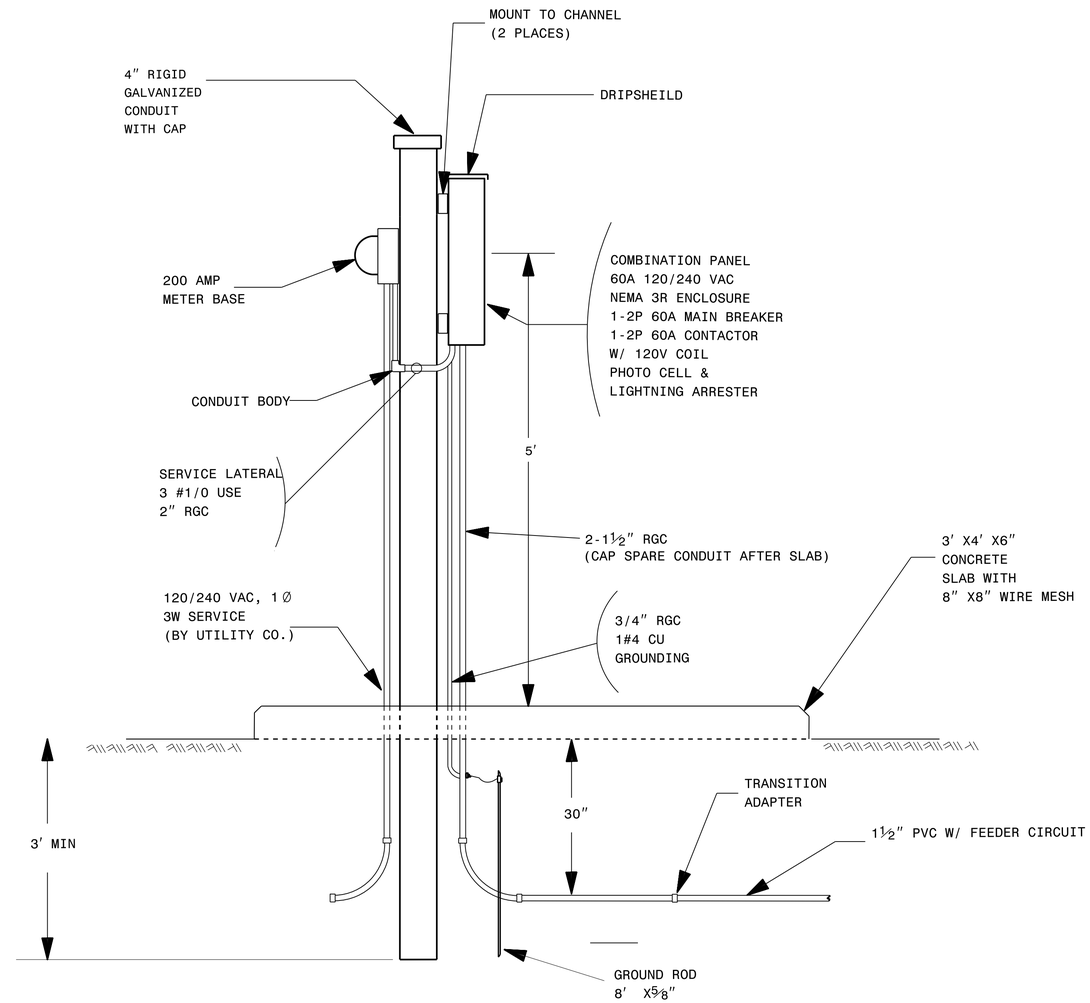

LIGHTING CONTROLLER/SERVICE ENTRANCE EQUIPMENT

SQUARE D NIGHT-MASTER CLASS 8903 OR APPROVED EQUAL

△ NOTES

1. STUB AND CAP CONDUIT 6" ABOVE LIGHT PEDESTAL. LIGHTS WILL BE INSTALLED AFTER BRIDGE STRUCTURE CONSTRUCTION IS COMPLETED.
2. STRUCTURE HAS NO EXPANSION JOINTS. CONDUIT EXPANSION FITTINGS ARE NOT REQUIRED.
3. PROVIDE SUFFICIENT COVER TO ENSURE CONDUIT WILL NOT BE DAMAGED WHEN CONSTRUCTION JOINTS ARE SAW CUT. SEE STRUCTURE PLANS FOR CONSTRUCTION JOINT DETAILS.
4. TYPICAL ELECTRICAL SERVICE POINT. CONTRACTOR SHALL BE RESPONSIBLE FOR FINDING SUITABLE LOCATION FOR ELECTRICAL CONTROL SERVICE POINT. THE LOCATION MUST BE APPROVED BY ENGINEER TO ENSURE THERE IS NO CONFLICT WITH OTHERS.
5. IF DIRECT CONDUIT RUN TO ELECTRICAL CONTROL SERVICE POINT IS NOT REQUIRED FROM THIS LOCATION, NO STUB AND CAPPED UNDERGROUND CONDUIT REQUIRED.
6. CONTRACTOR SHALL LABEL AS "CONTROL SYSTEM "A"".
7. CONTRACTOR SHALL LABEL CONDUCTOR RUN TO LIGHTING SYSTEM AS "A1".

PROJECT NO. B-5129A

PAMLICO COUNTY

STATION: 13+68.50 -L-

Rev.	Date	Description	Approved
2			
1			

NORTH CAROLINA
DEPARTMENT OF TRANSPORTATION
ROADWAY DESIGN LIGHTING/ELECTRICAL SECTION

ELECTRICAL CONDUIT SYSTEM

REPLACE BRIDGE OVER NORTH PRONG OF BAY RIVER ON NC 304 IN BAYBORO

PAMLICO COUNTY

Drawn By:	Approved By:	Dwg No.:
AB	PKC	

02/03/98
11-DEC-2014 12:23
R:\Lighting\Electrical\Lighting Design\B-5129A_l&e_ECS_e2.dgn
$$$$USERNAME$$$$